Cambridge Assessment International Education

Cambridge International AS & A Level

CANDIDATE NAME									
CENTRE NUMBER						CANDIDATE NUMBER				

9035669305

PHYSICS **9702/32**

Paper 3 Advanced Practical Skills 2 **May/June 2022**

2 hours

You must answer on the question paper.

You will need: The materials and apparatus listed in the confidential instructions

INSTRUCTIONS

- Answer **all** questions.
- Use a black or dark blue pen. You may use an HB pencil for any diagrams or graphs.
- Write your name, centre number and candidate number in the boxes at the top of the page.
- Write your answer to each question in the space provided.
- Do **not** use an erasable pen or correction fluid.
- Do **not** write on any bar codes.
- You will be allowed to work with the apparatus for a maximum of 1 hour for each question.
- You should record all your observations in the spaces provided in the question paper as soon as these observations are made.
- You may use a calculator.
- You should show all your working and use appropriate units.

INFORMATION

- The total mark for this paper is 40.
- The number of marks for each question or part question is shown in brackets [ ].

For Examiner's Use	
1	
2	
Total	

This document has **16** pages. Any blank pages are indicated.

© UCLES 2022

BLANK PAGE

© UCLES 2022

You may not need to use all of the materials provided.

1 In this experiment, you will investigate an electrical circuit.

(a) (i) You have been provided with a stand with two clamps attached.
Do not change the positions of the clamps during the experiment.

Measure the distance *x* between the **centres** of the rods of the two clamps, as shown in Fig. 1.1.

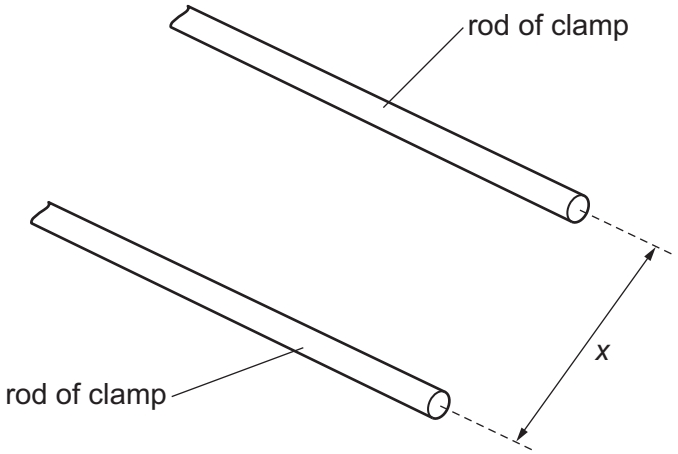

Fig. 1.1

x = ... cm [1]

(ii) You have been provided with a length of resistance wire with crocodile clips attached to its ends.

- Wrap the wire around the rods of the clamps, as shown in Fig. 1.2.

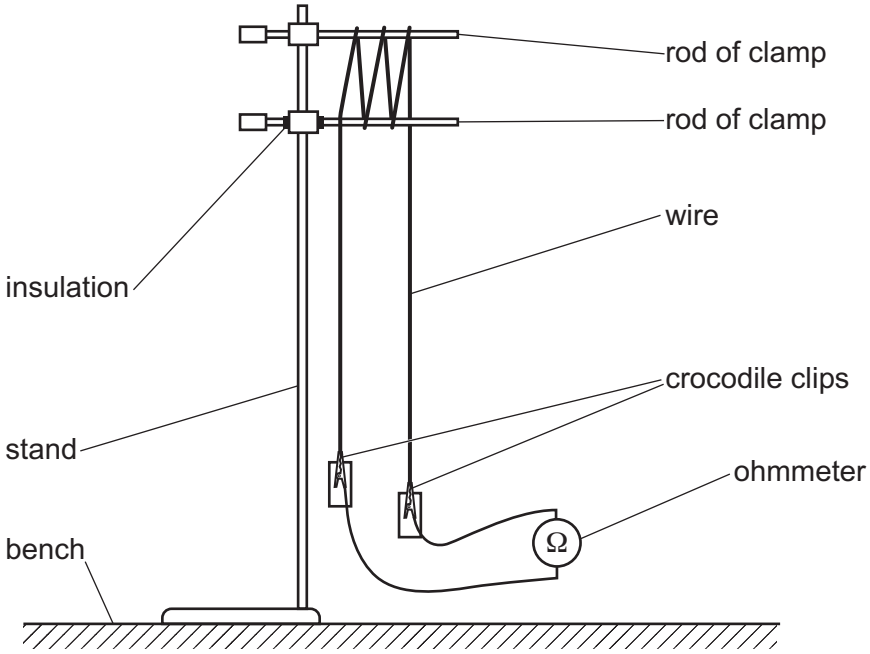

Fig. 1.2

- Connect the ohmmeter to the crocodile clips, as shown in Fig. 1.2.
- Record the resistance *R* shown by the ohmmeter.

R = ...

© UCLES 2022

- Five sections of wire are in contact with both rods, as shown in Fig. 1.3.

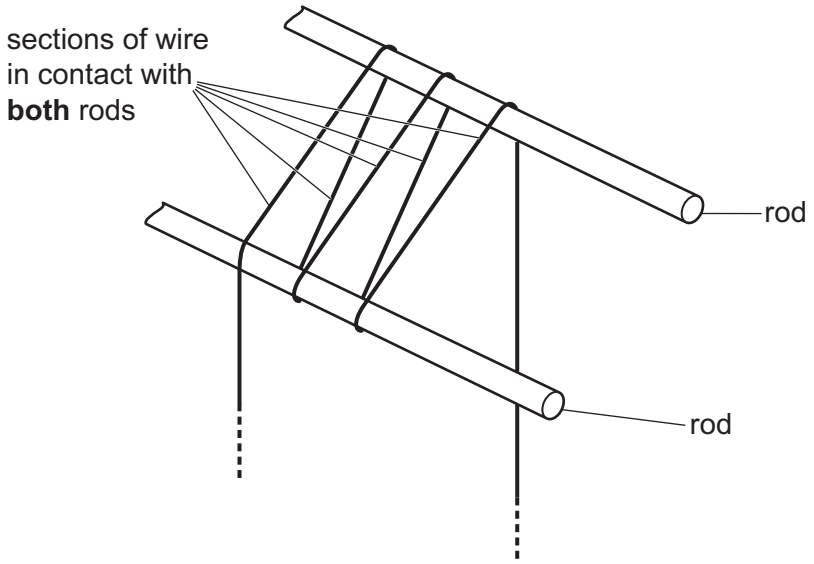

Fig. 1.3

- Record the number *n* of sections of wire that are in contact with both rods.

n = ...
[1]

(b) Change n by wrapping the wire around the rods a different number of times. Measure R and count n. Continue until you have five sets of values of R and n.

Record your results in a table. Include values of $\left(n - \frac{1}{n}\right)$ to three significant figures in your table.

[9]

(c) **(i)** Plot a graph of R on the y-axis against $\left(n - \frac{1}{n}\right)$ on the x-axis. [3]

(ii) Draw the straight line of best fit. [1]

(iii) Determine the gradient and y-intercept of this line.

gradient = ...

y-intercept = ...

[2]

© UCLES 2022

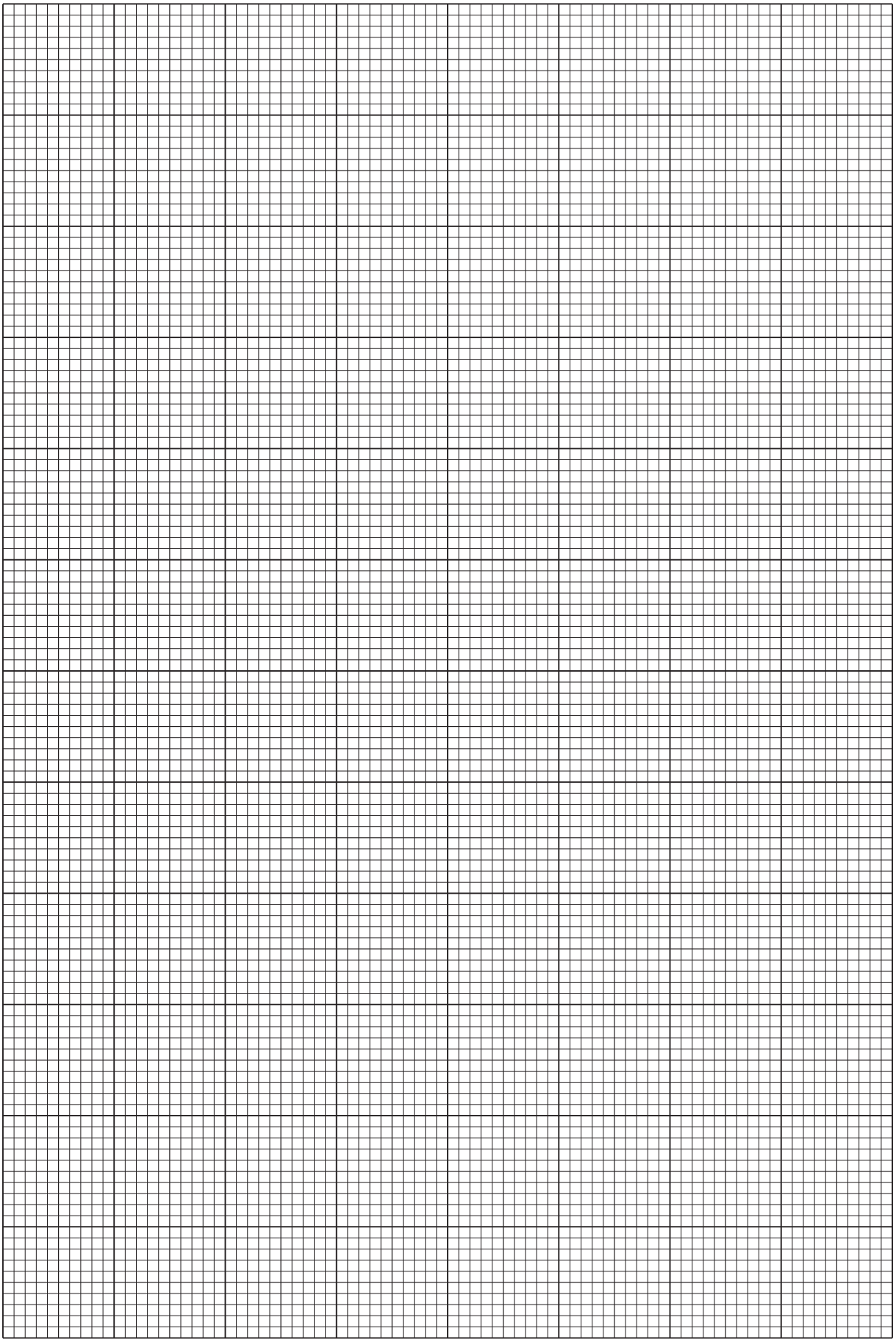

(d) It is suggested that the quantities R and n are related by the equation

$$R = a\left(n - \frac{1}{n}\right) + b$$

where a and b are constants.

Use your answers in **(c)(iii)** to determine the values of a and b.
Give appropriate units.

a = ...

b = ...
[2]

(e) The resistance per unit length r of the wire can be found using

$$a = -xr.$$

Calculate r. Give an appropriate unit.

r = ... [1]

[Total: 20]

© UCLES 2022

You may not need to use all of the materials provided.

2 In this experiment, you will investigate an oscillating system.

(a) (i) ● You have been provided with two lengths of string and a wooden rod. Tie the strings to the rod at the positions of the lines, as shown in Fig. 2.1.

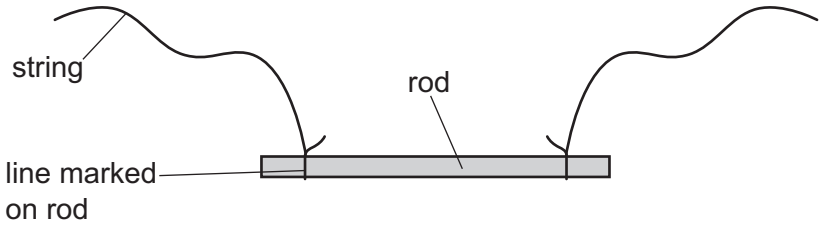

Fig. 2.1

● Assemble the apparatus as shown in Fig. 2.2.
Both split corks should be at a height of 55 cm above the bench.

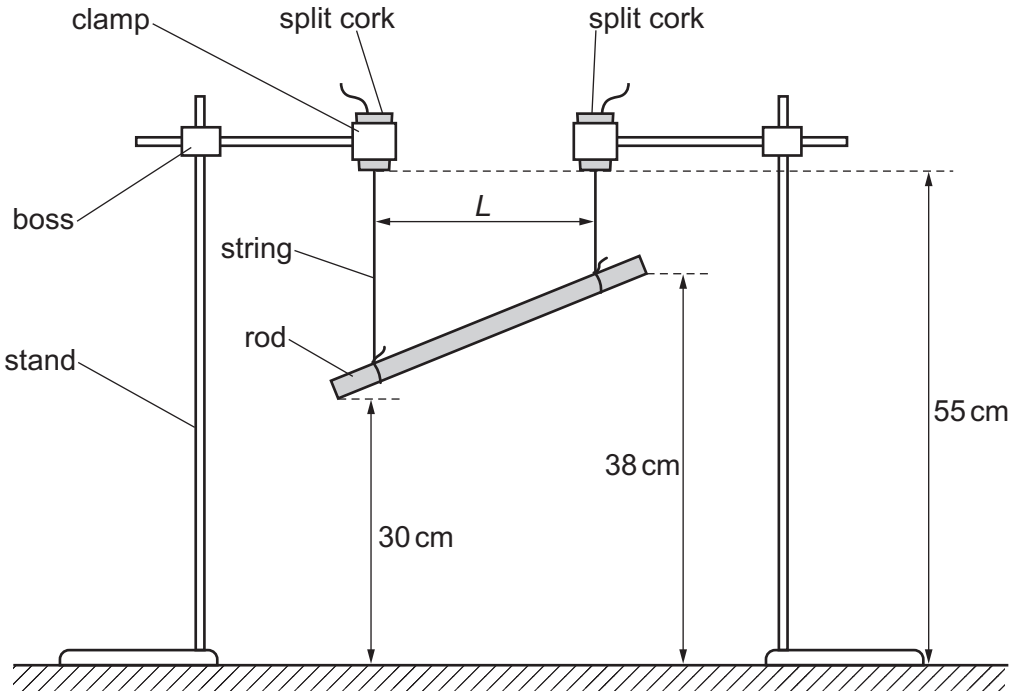

Fig. 2.2

● Adjust the strings in the split corks so that the lower end of the rod is 30 cm above the bench and the upper end of the rod is 38 cm above the bench, as shown in Fig. 2.2.

● Move the stands so that the strings are vertical.

● The horizontal distance between the strings is *L*, as shown in Fig. 2.2.

Measure and record *L*.

L = ... [1]

(ii) ● Push the centre of the rod away from you. Release it and watch its motion.
The rod will twist for a while and then swing for a very short time before twisting again and swinging again for a very short time.

● The time from when the rod swings to when it next swings is t_s.

Measure and record t_s.

t_s = ... [2]

(iii) Estimate the percentage uncertainty in your value of t_s. Show your working.

percentage uncertainty = ...% [1]

© UCLES 2022

(b) (i) ● Leave the strings clamped in the split corks, but slide the string loops off the rod.

● For the **longer** string, fill the loop with modelling clay to make a pendulum, as shown in Fig. 2.3.

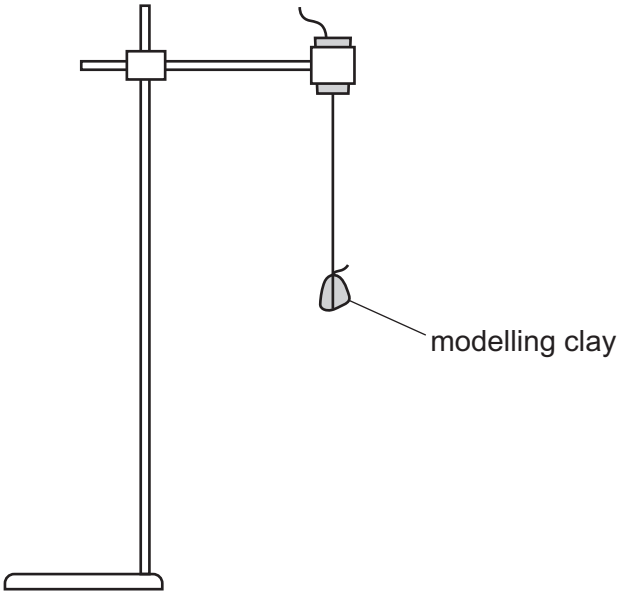

Fig. 2.3

● Push the modelling clay a short distance away from you. Take measurements to determine the period T_1 of its oscillations.

T_1 = ... [1]

(ii) Repeat **(b)(i)** for the **shorter** string to determine the period T_2 of its oscillations.

T_2 = ... [1]

(iii) Calculate B, where

$$B = \frac{T_1 T_2}{(T_1 - T_2)}.$$

Give an appropriate unit.

B = ... [1]

(c) ● Remove the modelling clay from the string loops and slide the loops back onto the rod at the positions of the lines.

● Adjust the strings in the split corks so that the lower end of the rod is 20 cm above the bench and the upper end of the rod is 33 cm above the bench, as shown in Fig. 2.4.

● Move the stands so that the strings are vertical.

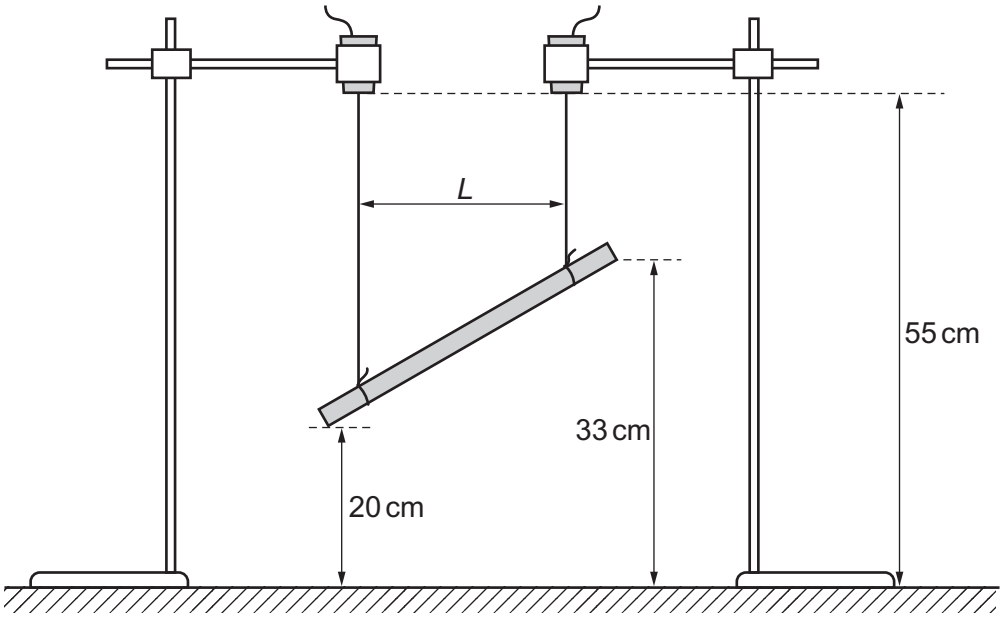

Fig. 2.4

● Measure and record L.

L = ...

● Push the centre of the rod away from you. Measure and record t_s.

t_s = ...

- Repeat **(b)**.

T_1 = ...

T_2 = ...

B = ...
[3]

(d) It is suggested that the relationship between t_s, B and L is

$$t_s = kBL$$

where k is a constant.

Using your data, calculate two values of k.

first value of k = ...

second value of k = ...
[1]

(e) It is suggested that the percentage uncertainty in the values of k is 15%.

Using this uncertainty, explain whether your results support the relationship in **(d)**.

.....

.....

.....

..... [1]

(f) (i) Describe **four** sources of uncertainty or limitations of the procedure for this experiment.

For any uncertainties in measurement that you describe, you should state the quantity being measured and a reason for the uncertainty.

1 .....

.....

2 .....

.....

3 .....

.....

4 .....

.....

[4]

(ii) Describe **four** improvements that could be made to this experiment. You may suggest the use of other apparatus or different procedures.

1 .....

.....

2 .....

.....

3 .....

.....

4 .....

.....

[4]

[Total: 20]

© UCLES 2022

BLANK PAGE

Permission to reproduce items where third-party owned material protected by copyright is included has been sought and cleared where possible. Every reasonable effort has been made by the publisher (UCLES) to trace copyright holders, but if any items requiring clearance have unwittingly been included, the publisher will be pleased to make amends at the earliest possible opportunity.

To avoid the issue of disclosure of answer-related information to candidates, all copyright acknowledgements are reproduced online in the Cambridge Assessment International Education Copyright Acknowledgements Booklet. This is produced for each series of examinations and is freely available to download at www.cambridgeinternational.org after the live examination series.

Cambridge Assessment International Education is part of Cambridge Assessment. Cambridge Assessment is the brand name of the University of Cambridge Local Examinations Syndicate (UCLES), which is a department of the University of Cambridge.

© UCLES 2022